PDW

GHK

WWW.GHKAIRSOFT.COM

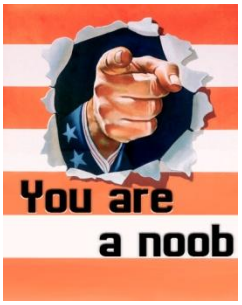

Manuel de Montage fait à partir du Manuel GHK.

- 請務必帶上護目鏡等護眼用具
- 請勿射擊人或動物
- 隨意用BB槍開玩笑可能會觸及法律
- 嚴禁望向槍口
- 請將槍口朝向安全的地方
- 射擊時無論遠近，隨時確認射擊區內是否有行人或車輛經過
- 避免任意不經意地扣處扳機
- 除非完成射擊準備，否則切勿將手指放入扳機
- 不用或搬運時，請務必放置於槍盒等容器內
- 請存放在兒童拿不到的地方
- 禁止擅自改造或加強槍枝結構
- 非射擊時請將選擇鈕切換到保險位置
- 未成年兒童請由家長陪同下使用

- Always wear eye protective gear.
- Never aim or shoot a person or animal as the target.
- You may be punished if you are shooting for a practical joke.
- Never look into the gun muzzle.
- Always direct the muzzle towards a safe direction.
- Never shoot the air gun at places where people and cars pass cross.
- Avoid pulling the trigger carelessly.
- Please put away your fingers from the trigger,except when you are ready to shoot a target.
- Always put the gun in a case or bag when you are carrying it.
- Store the gun at places out of reach by children.
- Adult supervision is required for any person under the age of 18.

塗抹高濃度的油
Apply high viscosity oil.

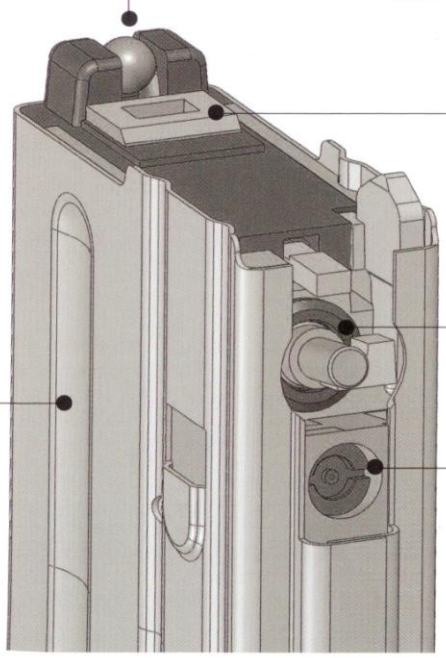
填充勿超過40發BB彈
Don't fill in BBs over 40 rounds.
勿放置高溫環境40℃以上
Don't place magazine at temperature above 40 ℃ environment.
塗抹高濃度的油
Apply high viscosity oil.
充氣時間勿超過5秒
Don' t fill over 5 seconds while gas filling.
隨時彈匣內要保持瓦斯
Remain gas in the magazine anytime.
請使用12Kg瓦斯
Only use 12KG Green gas.

隨時旋緊
Keep tighten any time.

請抵肩射擊
Stock against shoulder tightly when shooting.

旋緊
Tighten.

射擊時請勿手握彈匣
Hands free from the magazine while shooting.

金屬磨擦面，上油潤滑
Lubricate with oil on the rubbed metal surface.

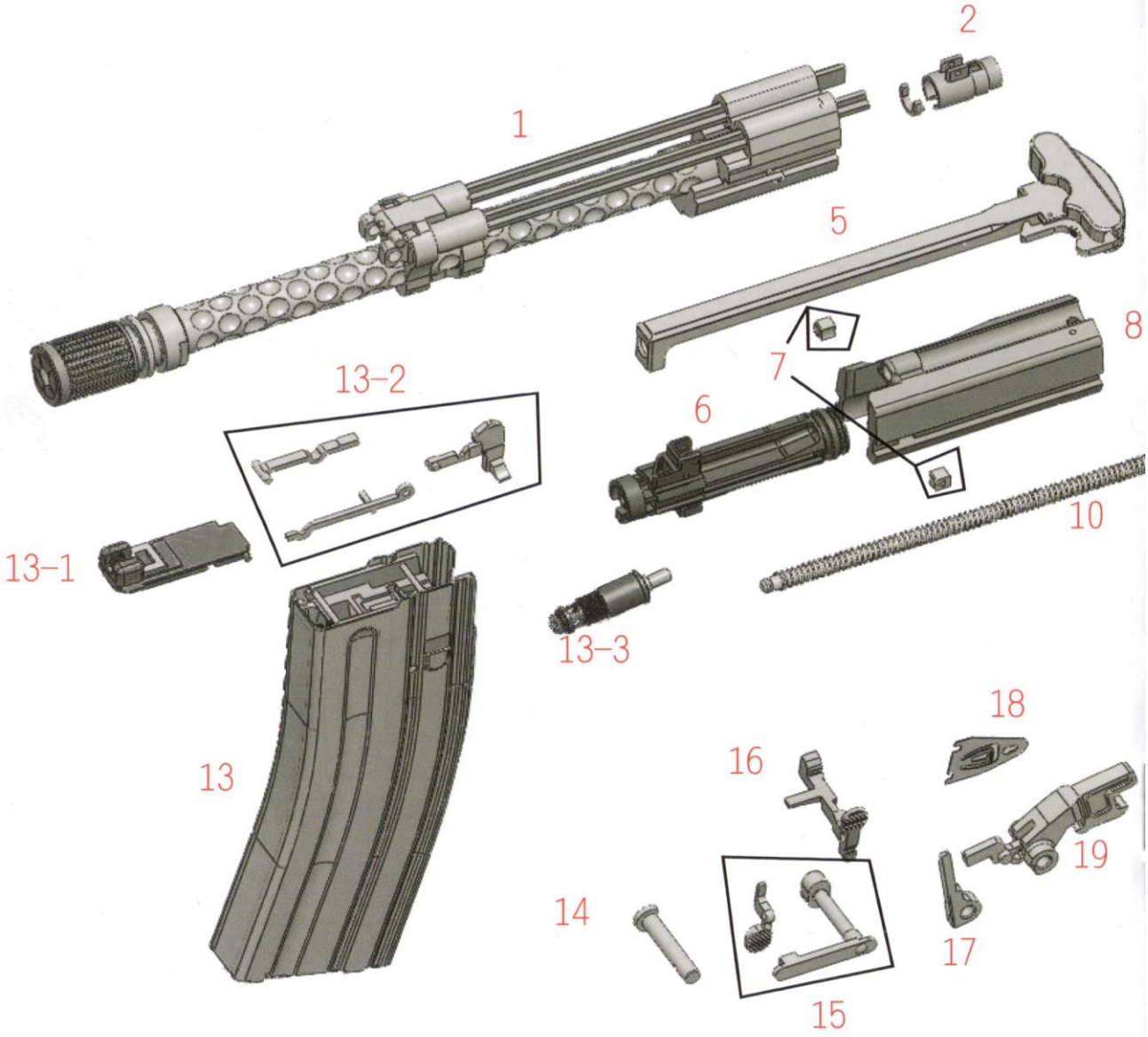
1
2
5
7
8
6
13-2
13-1
10
13-3
13
18
16
19
14
17
15

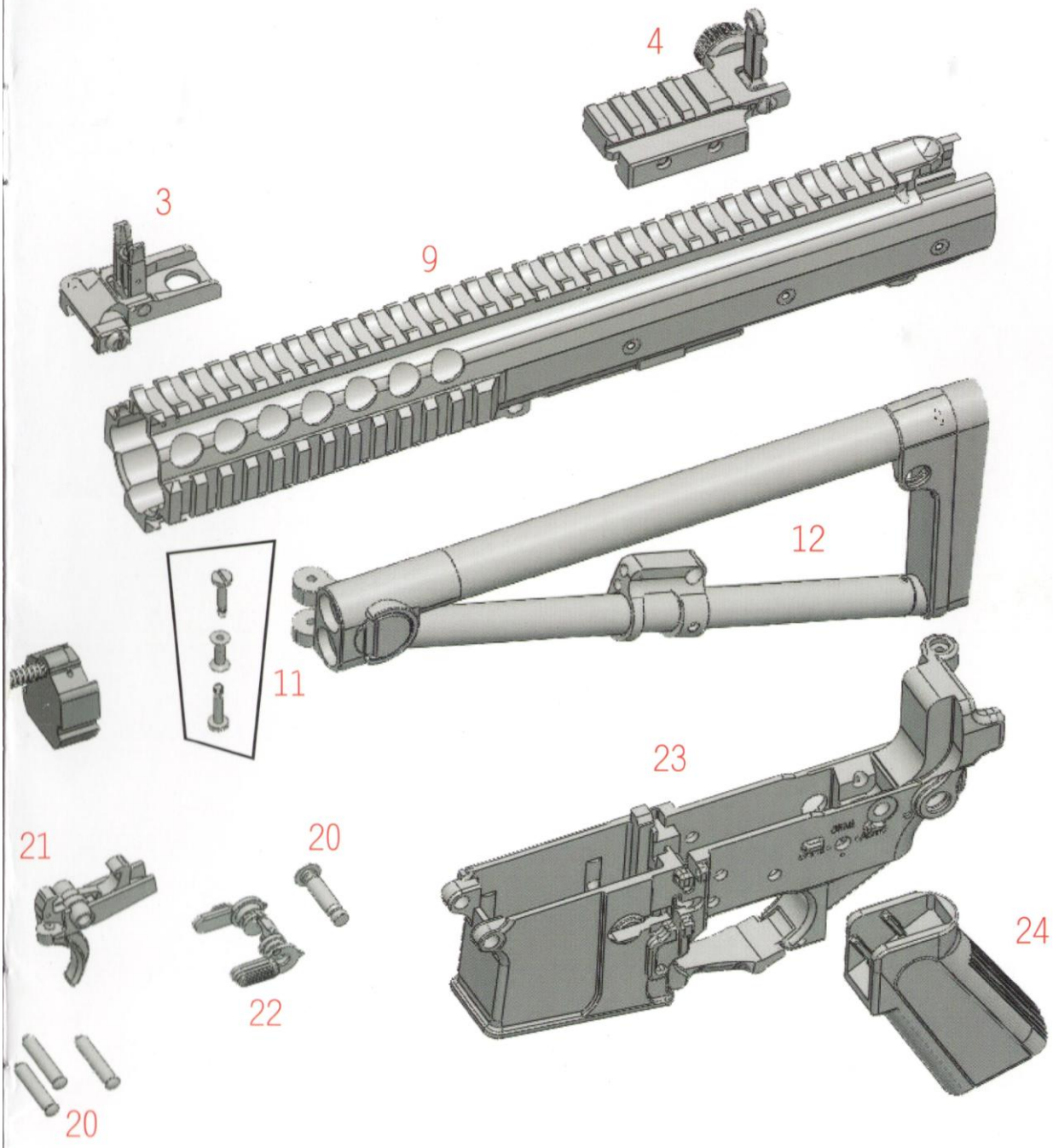
4
3
9
12
11
23
21
20
24
22
20

1F, No.49, BO-AI 3 Rd,
ZHONG LI City,
TAOYUAN COUNTY
32041 TAIWAN, R.O.C.
Tel: 886-3-4278783
Fax: 886-3-4278496
www.ghkairsoft.com
Email:ghk@ghkairsoft.com